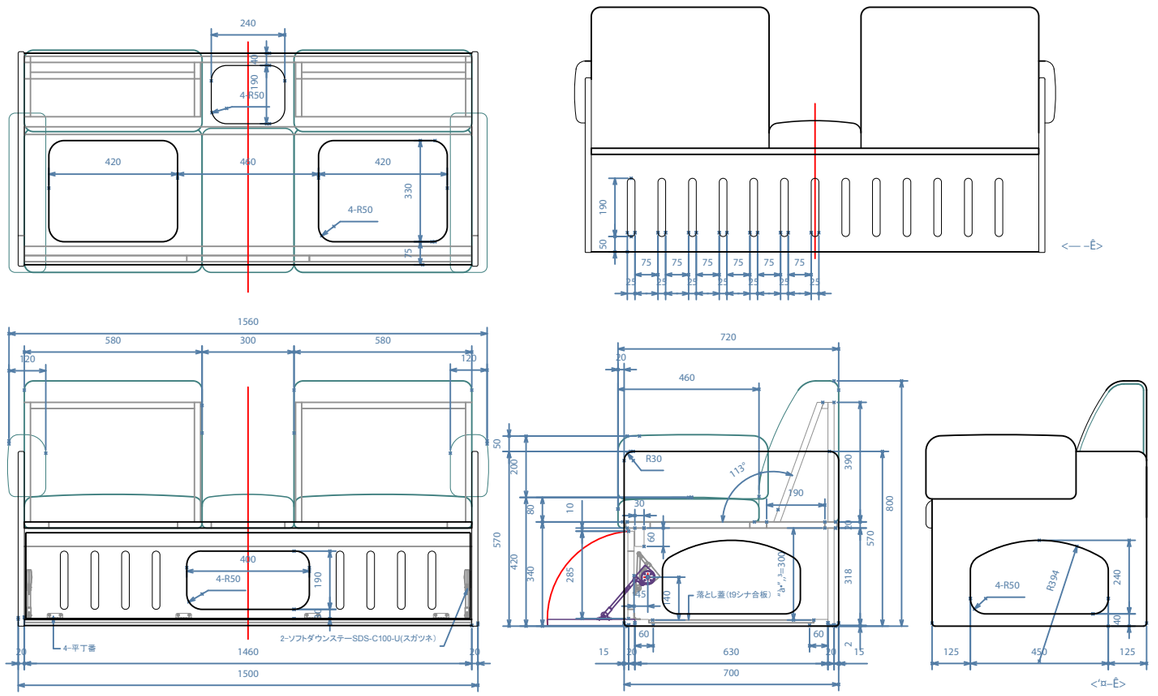

FILENAME

CLIENT

2					ƒVƒ"ƒR?[Š"Ž®‰ïŽĐ	³"F		Þ Ž¿		ŽÚ "x	ŽŽì?}	"ú •t	2010.10.30	?}–Ê"Ô†	01/02
1						ŒŸ ?}		"E —v		1/10		•i "Ô	ƒhƒbƒOƒnƒEƒXƒ\ƒtƒ@?[		
‹L†	"ú?@•t	‹L?@?@Ž–	ì?}	³"F		» ?}	¬—Ñ	" —Ê	A3?}¯g			?}–Ê–¼	2ŽŸŽŽì?@?\'ç?}		

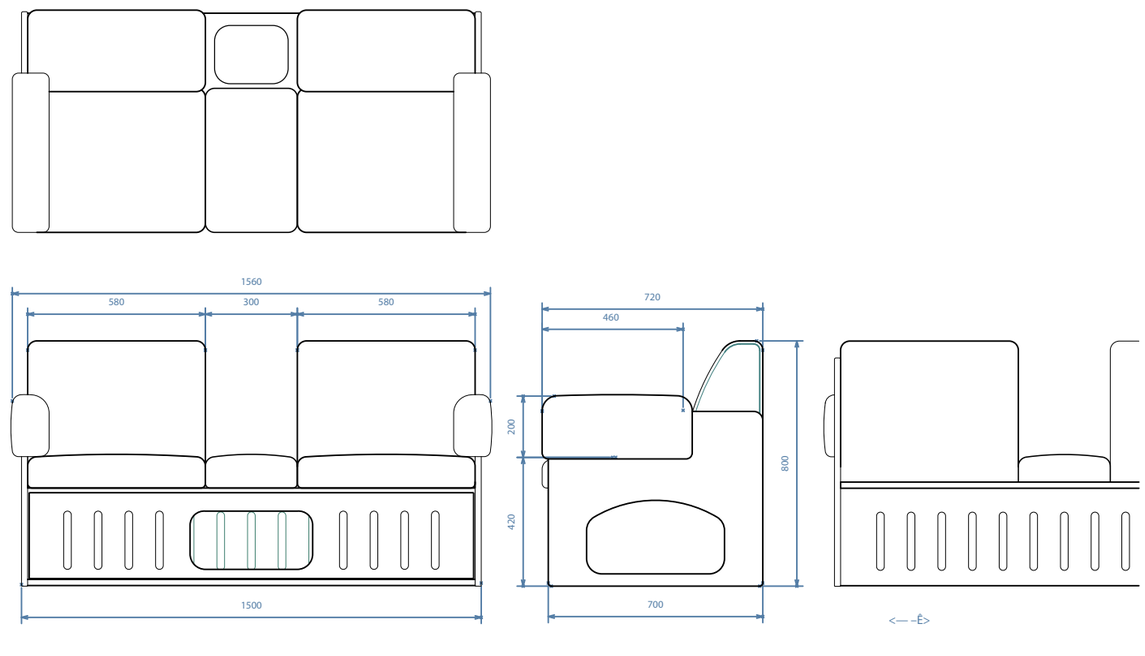

FILENAME

CLIENT

2					ƒVƒ"ƒR?[Š"Ž®‰ïŽĐ	³"F		Þ Ž¿		ŽÚ "x	ŽŽì?}	"ú •t	2010.10.30	?}–Ê"Ô†	02/02
1						ŒŸ ?}		"E —v		1/10		•i "Ô	ƒhƒbƒOƒnƒEƒXƒ\ƒtƒ@?[		
‹L†	"ú?@•t	‹L?@?@Ž–	ì?}	³"F		» ?}	¬—Ñ	" —Ê	A3?}¯g			?}–Ê–¼	,QŽŸŽŽì?@`Ó ?}		